PoWer TIG Series

GeKaMac®

Power TIG 3000 AC / DC Pulse

Manual Instructions

Please Read and Understand This Manual
Before Operating The Welding Machine

www.gedikwelding.com

This machine is for internal use only.

It complies with the WEEE Directive.

This machine has been designed in accordance with the EN 60974-1 and EN 60974-10 standards.

The machine is safe when installation, operation, and maintenance are performed in accordance with the user manual and regulations. The operator and machine owner are responsible for adhering to safety rules.

Gedik Kaynak San. Ve Tic. A.Ş. assumes no responsibility for safety or CE compliance if any modifications are made to the machine or if safety rules are not followed.

This Class A equipment is not suitable for use in homes and similar residential areas where the power supply is provided by the low-voltage public electricity network.

This machine is not household waste and cannot be disposed of in the trash.

When the machine reaches the end of its service life or becomes obsolete, it must be disposed of in accordance with regulations.

COMPLIES WITH THE WEEE DIRECTIVE.

Eco Design Statement

This machine has been designed and manufactured in accordance with the requirements of the 2009/125/EC Eco Design Directive concerning the environmentally friendly design of energy-related products.

Accordingly, machines with an idle mode are as follows.

	Idle Mode
MMA	**X**
MIG	√
TIG	√
Plazma	√
SAW	**Out of Scope**

Efficiency measurements should be conducted only on the power unit. The water cooling system should be disabled. For more information on measurements and machine settings, Gedik Kaynak Sanayi ve Ticaret A.Ş. should be consulted.

AT UYGUNLUK BEYANI

EU DECLARATION OF CONFORMITY

Bu uygunluk beyanı yalnızca imalatçının sorumluluğu altında düzenlenir.

This declaration of conformity is issued under the sole responsibility of the manufacturer.

İstanbul, Turkey, 08.03.2024

İmalatçı / Manufacturer

GEDİK KAYNAK SANAYİ ve TİCARET A.Ş.

Ankara Cad. No.306 Seyhli Pendik ISTANBUL TURKIYE

Ürün / Product	ARC WELDING MACHINE
Marka-Model / Brand- Model	POWER TIG 3000 AC/DC PULSE

Yukarıda tanımlanan beyanın nesnesi ilgili uyumlaştırılmış AB mevzuatı ile uyumludur.

The object of the declaration described above, is in conformity with the relevant union harmonisation legislation.

Direktifler / Directives	2014/30/EU & 2014/35/EU & 2009/125/EC EU/2019/1784

Uyumlaştırılmış standartlar ve uygunluğun deklare edilmesiyle ilişkili diğer referanslar.

References to the relevant harmonised standarts used and references to the other technical specifications in relation to which conformity is declared.

Standartlar / Standards	EN IEC 60974-1 EN IEC 60974-10

Bu ekipman, talimatlara uygun kurulduğunda, bakımı yapıldığında ve kullanıldığında belirtilen standartlara uygundur. Makine üzerinde bir değişiklik yapıldığında veya yanlış kullanımda deklarasyon geçersiz olur.

The equipment is in compliance with pertinent legislation when installed, utilized, and maintained in accordance with the enclosed instructions. This declaration will be invalid under any modification or improper use.

İmalatçı Adına İmzalayan / Signed for and on behalf of:

Hatice Özel, Equipment Business Unit Director

EN ENGLISH

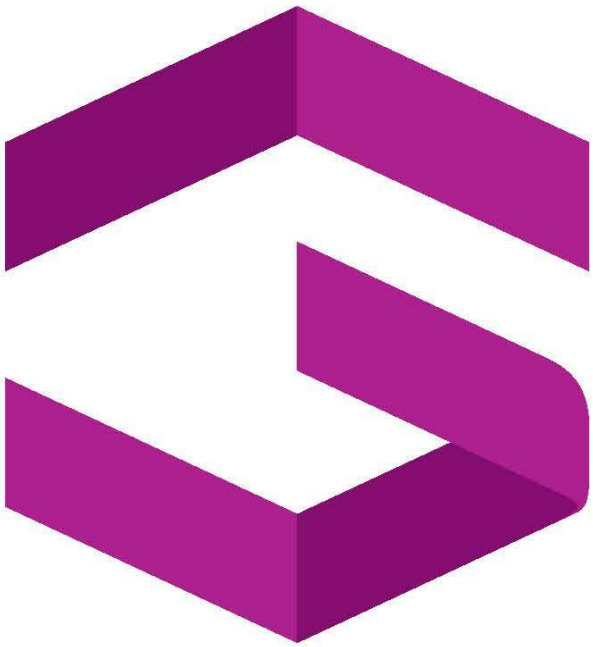

Introduction

Thank you for buying our product.
In order to get the best performance out of the plant and ensure the maximum lifespan of its parts, the use and maintenance instruc-tions contained in this manual must be read and strictly complied with, as well as **the safety instructions contained in the rele-vant folder**. If repairs to the plant are required, we recommend that our clients contact our service centre workshops, as they have the necessary equipment and personnel that are specifically trained and constantly updated.
All our machines and equipment are constantly developed and so changes may be made in terms of their construction and features.

Description

PoWer TIG 3000 AC / DC Pulse

Powerful, compact, and light weight, the **3000 AC /DC Pulse** units represent the most innovative, high performance, and tech-nically advanced single- phase inverter generators for TIG weld-ing to be found. The **PFC** (**Power Factor Correction**) device fitted optimises absorption of energy from the mains, means that these high power generators can be connected to power supply systems with 16A fuses without any problem. The user friendly digital con-trol and advanced functions ensure complete stability of all welding parameters, guaranteeing high quality TIG welding for all metals, aluminium, and its alloys, as well as MMA welding with any type of electrode. The **3000 AC / DC Pulse** units are the ideal solu-tion for all professional welding applications and for maintenance work that calls for power and portability.

PoWer TIG 3000 AC / DC Pulse

Using the most modern IGBT based inverter technology, the three-phase TIG generator with high frequency **3000 AC/DC Pulse** or 3000 AC/DC R ignition, comes with an innovative digital control for all welding parameters.
Technologically cutting-edge, robust, easy to use with both direct and alternating current, fitted with high potential digital control, this generator can be used for high quality TIG welding of all met-als including aluminium and alloys. This means that the machine is particularly suitable for specific uses in industry and the main-tenance sector.
It also guarantees excellent performance for MMA welding, even when using particularly difficult cellulosic and basic electrodes.

Features

The characteristics found in all welding machines in the PoWer TIG AC/DC range are:

- Innovative and compact design.
- Compact size and light weight for easy transportation.
- Metallic main structure with shock-proof plastic front panel.
- Protective visor on the control panel.
- Robust handle integrated into the chassis.
- Digital control, regulation and monitoring of all welding param-eters.
- Digital display for pre-setting welding parameters.
- Digital ammeters and voltmeters are standard fittings, with pre-setting of welding current and saving of the latest value (Hold-function).
- Feature that makes it possible to save and call up personalised welding programs.
- Self-diagnosis device.
- Overheating thermostatic protection.
- Automatic compensation for mains voltage fluctuations within ±20%.
- Safety barrier against excess voltage from mains.
- Electromagnetic disturbance is reduced due to high frequency being involved only during the arc ignition phase.
- “Energy Saving” function to operate the power source cooling fan andthe torch water cooling only when necessary.
- Low absorbed current consumption.
- This generator also conforms to all the standards and directives in force in the European Community.

- **TIG**
  - Excellent TIG welding characteristics.
  - High frequency arc striking of TIG welding, precise and efficient even from long distance.
  - Using special TIG torches allows remote adjustment of weld-ing current directly from the torch.
  - The diameter of the electrode used is set to allow greater con-trol of the ignition and dynamics of the arc.
  - Standard built-in pulsation (from 0,5 to 2000 Hz) with provision for entering the SYN Pulse function.
  - Square, mixed, sinusoidal, or triangular wave shape selector.
  - Square welding wave frequency balancing / regulation and "Balance Plus".
- **MMA**
  - The VRD (Voltage Reduction Device) can be activated, which reduces voltages to below 12 V, which means that the weld-ing machine can be used in ambient conditions in which there is a high electrical risk, thereby providing maximum opera-tor safety.
  - "Arc Force" adjustable to select the best dynamic character-istics for the welding arc.
  - "Hot Start" adjustable to improve ignition with particularly dif-ficult electrodes.
  - Anti-sticking function to avoid the electrodes sticking.

- The PFC device makes the wave form of the current absorbed si-nusoidal, which results in no harmonic disturbance on the mains and optimisation of absorption, which allows you to use the generator's full power with a 16 A fuse, as well as ensuring great-er protection of the welding machine against fluctuations in the power supply voltage.

PoWer TIG 3000 AC/DC Pulse

- Suitable for use on all robotic systems.
- Optional "RoboMAT 1" interface that handles all process start/stop signals, regulation of the principal welding parameters, and also acts as a flexible, efficient interfacing system that meetsall Analogue / Digital connection requirements.

Usage limits (IEC 60974-1)

The use of a welder is typically discontinuous, in that it is made up of effective work periods (welding) and rest periods (for the posi-tioning of parts, the replacement of wire and underflushing opera-tions etc. This welder is dimensioned to supply a I_2 max nominal current in complete safety for a period of work of X% of the to-tal usage time. The regulations in force establish the total usage time to be 10 minutes. The work cycle is considered to be X% of this period of time. If the permitted work cycle time is exceeded, an overheat cut-off occurs to protect the components around the welder from dangerous overheating. Activation of thermal protec-tion is signaled by "t° C" flashing on control panel display (for fur-ther information see the MTA control panel manual). After several minutes the overheat cut-off rearms automatically and the welder is ready for use again.

Technical data

The general technical data of the system are summarized in ta-ble 1.

Table 1

Model		PoWer TIG 2200 AC/DC Pulse		PoWer TIG 3000 AC/DC Pulse	
		TIG	**MMA**	**TIG**	**MMA**
Power supply 50/60 Hz	V	1~ 230 ±20%		3~ 400 ±20%	
Power supply:max	Ω	(*)		0,092	
Input power @ Max	kVA	6,5	7,0	9,6	
Delayed fuse (@ 100%)	A	16		10	
Power factor / cosφ		0,99 / 0,99		0,95 / 0,99	
Efficiency degree	η	0,77		0,76	0,81
Open circuit voltage	V	100		88	
Current range	A	5÷220	5÷180	5÷300	10÷250
Duty cycle @ 100% (40°C)	A	140	120	210	190
Duty cycle @ 60% (40°C)	A	180	150	250	220
Duty cycle @ X% (40°C)	A	220 (30%)	180 (30%)	300 (35%)	250 (40%)
Usable electrodes	mm	1,2÷2,4	1,6÷4,0	1,2÷4,0	1,6÷5,0
Standards		IEC 60974-1 • IEC 60974-3 • IEC 60974-10 CE S		IEC 60974-1 • IEC 60974-3 • IEC 60974-10 CE S	
Protection class		IP 23 S		IP 23 S	
Insulation class		F		F	
Dimensions	mm	465 - 390 - 185		495 - 390 - 185	
Weight	kg	15,5		19	

IMPORTANT:
These systems, tested in accordance with the requirements of the **EN/IEC 61000-3-3** standard, satisfy the requirements laid down by the **EN/ IEC 61000-3-11** standard.

PoWer TIG 2200 AC/DC Pulse

(*) This equipment meets the requirements laid down in the **EN/IEC 61000-3-12** standard on harmonic currents.

PoWer TIG 3000 AC/DC Pulse
This equipment complies with **EN/IEC 61000-3-12** provided that the maximum permissible system impedance Z_{max} is less than or equal to 0,092 at the interface point between the user's supply and the public system. It is the responsibility of the installer or user of the equipment to ensure, by consultation with the distribution network operator if necessary, that the equipment is connected only to a supply with maximum permissible system impedance Z_{max} less than or equal to 0,092.

How to lift up the machine

The weld machine has a strong handle all in one with the frame, used for transporting the machine manually only.
NOTE: *These hoisting and transportation devices conform to Eu-ropean standards. Do not use other hoisting and transportation systems.*

Open the packaging

The system essentially consists of:
- **PoWer TIG AC/DC** or **AC/DC R** weld unit.
- Separately:
  Welding TIG torches (optional).
  Neck strap (optional 2200 AC/DC).
  Ground cable, complete with rapid coupling (optional).
  Coolant unit for welding torch (optional).
  trolley for transportation (optional).
  "RoboMAT 1" analogue / digital robot interface (optional this interface must only be used for automatic / robotised equip-ments).
  Generator interconnection cable - robot interface (optional - this interface must only be used for automatic / robotised equipments).

Upon receiving the system:
- Remove the welding generator and all relevant accessories-components from their packaging.
- Check that the weld machine is in good condition, if not report any problems immediately to the seller-distributor.
- Make sure all ventilation grilles are open and that no foreign bod-ies are blocking the air circulation.

Installation

The installation site for the system must be carefully chosen in or-der to ensure its satisfactory and safe use. The user is responsi-ble for the installation and use of the system in accordance with the producer's instructions contained in this manual. Before install-ing the system the user must take into consideration the potential electromagnetic problems in the work area. In particular, we sug-gest that you should avoid installing the system close to:
- Signalling, control and telephone cables.
- Radio and television transmitters and receivers.
- Computers and control and measurement instruments.
- Security and protection instruments.

Persons fitted with pace-makers, hearing aids and similar equip-ment must consult their doctor before going near a machine in op-eration. The environment in which the equipment is installed must be suitable for the casing's protection level. This system is cooled by means of the forced circulation of air, and must therefore be placed in such a way that the air may be easily sucked in and ex-pelled through the apertures made in the frame.
The welding unit is characterised by the following levels:
- Protection level IP 23 S indicates that the equipment can be used both indoors and outdoors.
- Use class "S" means that the equipment can be used in condi-tions subject to heightened electrical shock.

Connection to the electrical supply

Connection of the machine to the user line (electrical current) must be performed by qualified personnel.
Before connecting the welding machine to the mains pow-er supply, make sure that rated voltage and frequency corre-spond to those provided by the mains power supply and that the welding machine's p ower switch is turned to "O".

PoWer TIG 2200 AC/DC • Single **-phase power supply**
Use the welder's own plug to connect it up to the main power sup-ply. Proceed as follows if you have to replace the plug:
- 2 conducting wires are needed for connecting the machine to the supply.
- The third, which is YELLOW GREEN in colour is used for mak-ing the "GROUND" connection.

PoWer TIG 3000 AC/DC AC/DC R • Three **- phase power supply**
The four-pole cable supplied with the system must be used for the connection to the mains power supply. This cable is made up of:
- Three conductors that are used to connect the machine to the power supply.
- The fourth, which is YELLOW-GREEN, is used to form the "GROUND" connection.

Connect a suitable load of normalised plug (3p+t) to the pow-er cable and provide for an electrical socket complete with fuses or an automatic switch. The ground terminal must be connected to the ground conducting wire (YELLOW-GREEN) of the supply.

Table 2 shows the capacity values that are recommended for fus-es in the line with delays.

NOTE: *Any extensions to the power cable must be of a suitable diameter, and absolutely not of a smaller diameter than the spe-cial cable supplied with the machine.*

Instructions for use

COMMAND AND CONTROL UNITS (Fig. A)
Pos. 1 MTA command and control panel.
Pos. 2 Positive pole quick connection.
Pos. 3 Fast coupling TIG torch gas tube.
Pos. 4 TIG weld auxiliary control connector (torch button, re-mote controlpedal, etc.).
Pos. 5 Negative pole quick connection.
Pos. 6 Power supply switch. In the "O" position the welder is off.
Pos. 7 Mains cable. **Pos. 8**
Welding gas hose.

Table 2

Model		PoWer TIG 2200 AC/DC		PoWer TIG 3000 AC/DC	
		TIG	**MMA**	**TIG**	**MMA**
Input power @ Max	kVA	6,5	7,0	9,6	
Delayed fuse (b @ 100%)	A	16		10	
Duty cycle @ X% (40°C)	A	220 (30%)	180 (30%)	300 (35%)	250 (40%)
Mains cable Length Section	 m mm²	 3,5 2,5		 4 2,5	
Ground cable Section	 mm²	 25		 35	

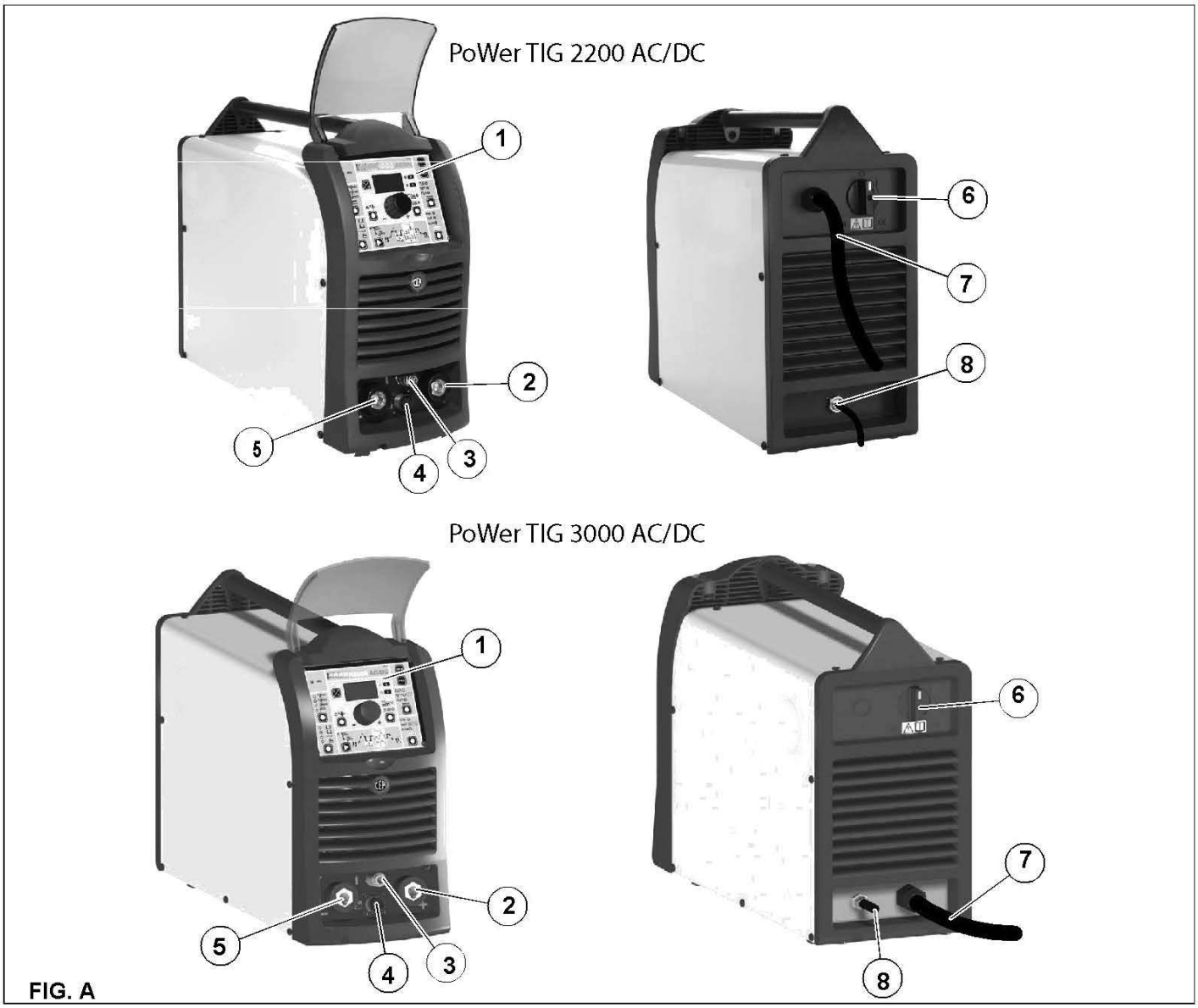

FIG. A

Interfacing accessories (optional)

"RoboMAT 1" analogue / digital robot interface
Fitted on the back of the PoWer TIG 3000 AC/DC R welding machine (Pos. 1, Fig. B).

"RoboMAT 1" analogue / digital robot interface
connection cable - Cutting robot or for automatic equipment
Connect the cable to the analogue / digital interface as shown in figure (Pos. 2, Fig. B).
To connect the other end of this cable see the diagram in the manualfor the "RoboMAT 1" analogue / digital robot interface.
IMPORTANT: Do not keep the "RoboMAT 1" analogue / digital *ro-bot interface connected to the generator, unless it is also powered by the automatic system.*

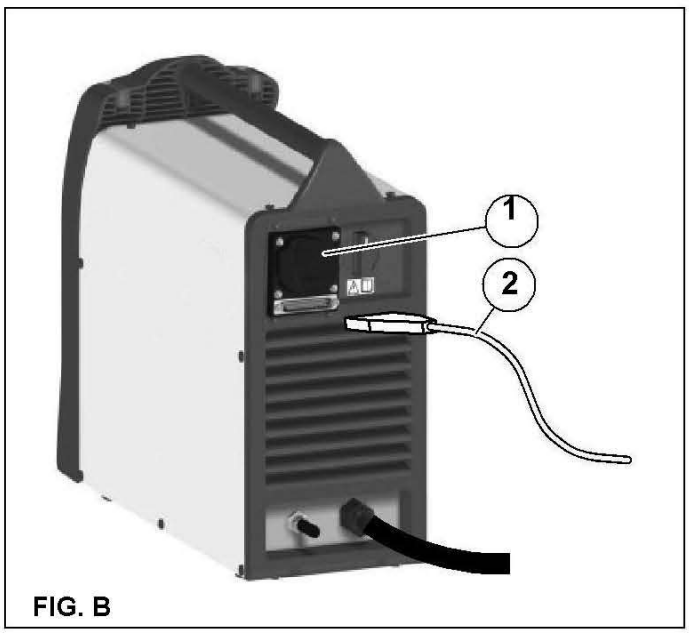

FIG. B

TIG welding

In the TIG process welding is achieved by melting the two metal pieces to be joined, with the possible addition of material from the outside, using an arc ignited by a tungsten electrode. The molten bath and the electrode are protected by and inert gas (for exam-ple, Argon). This type of welding is used to weld thin sheet metal or when elevated quality is required.

- Connecting the welding cables (Fig. C):
  Connect the gas hose to the Argon cylinder.
  With the machine switched off:
  Connect the ground cable to the snap-on connector marked + (positive).
  Connect the relative ground clamp to the workpiece or to the workpiece support in an area free of rust, paint, grease, etc..
  Connect the TIG torch power cable to the snap-on con-nector marked - (negative).
  Connect the torch gas tube to the connection (Pos. 3, Fig. A).
  Insert the torch button connector in the 6 poles holder (Pos. 4, Fig. A).

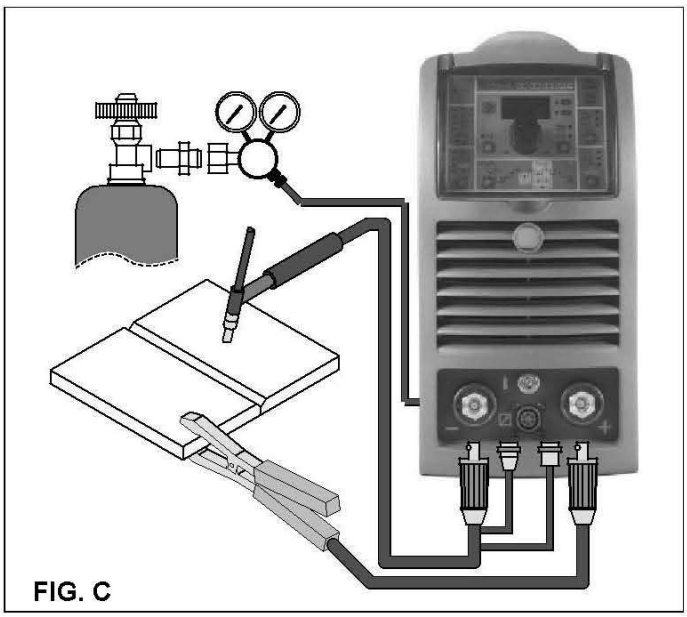

FIG. C

2) Switch the welding machine on by moving the power supply switch to **I** (Pos. 6, Fig. A).
3) Make the adjustments and select the parameters on the con-trol panel (for further information see the MTA control panel manual).

TIG WELDING WITH "Lift" TYPE STRIKING

4a) Open the gas cylinder and flow regulator.
5a) Put the electrode at the point at which welding is to begin, put the TIG torch at an angle so that the edge of the gas nozzle is not on top of the piece to be welded, keeping contact be-tween the point of the electrode and the piece to be welded (Fig. D-1).
6a) Press the torch button.
7a) The "Lift" function strikes the arc when the TIG torch electrode comes into contact with the workpiece and is then removed (Fig. D-2)
8a) Carry out TIG welding (Fig. D-3). To end welding:
- Lift the torch slowly, at a certain point the welding current decreases, and then stop.
- The welding machine follows an automatic down slope along with extinguishing of the arc.

9a) When finished welding remember to shut off the gas cylinder.

TIG WELDING WITH HIGH FREQUENCY STRIKING (HF)

4b) Open the gas cylinder and flow regulator.
5b) Put the electrode at the point at which welding is to begin, put the TIG torch at an angle so that the edge of the gas nozzle is not on top of the piece to be welded, keeping a 2-3 mm gap between the point of the electrode and the piece to be weld-ed (Fig. E-1).
6b) Press the torch button.
7b) The voltaic arc strikes even without contact between the TIG torch electrode and the workpiece (Fig. E-2).
8b) To continue welding put the torch back in its normal position (Fig. E-3).

IMPORTANT: *The high frequency switches off automatically af-ter switching on.*

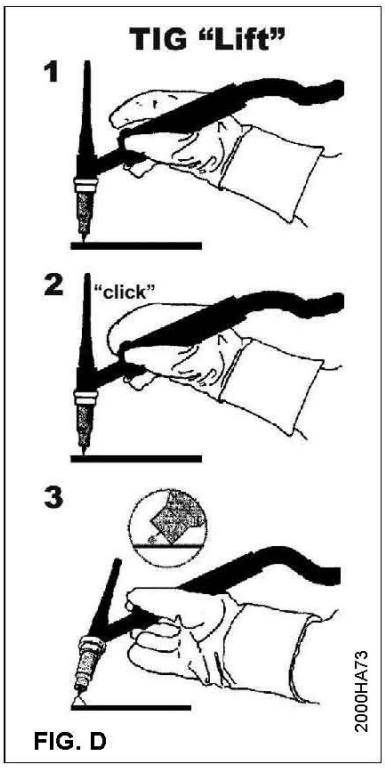

FIG. D

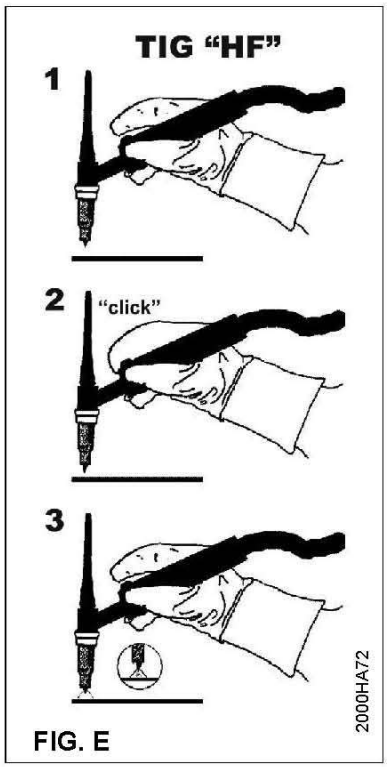

FIG. E

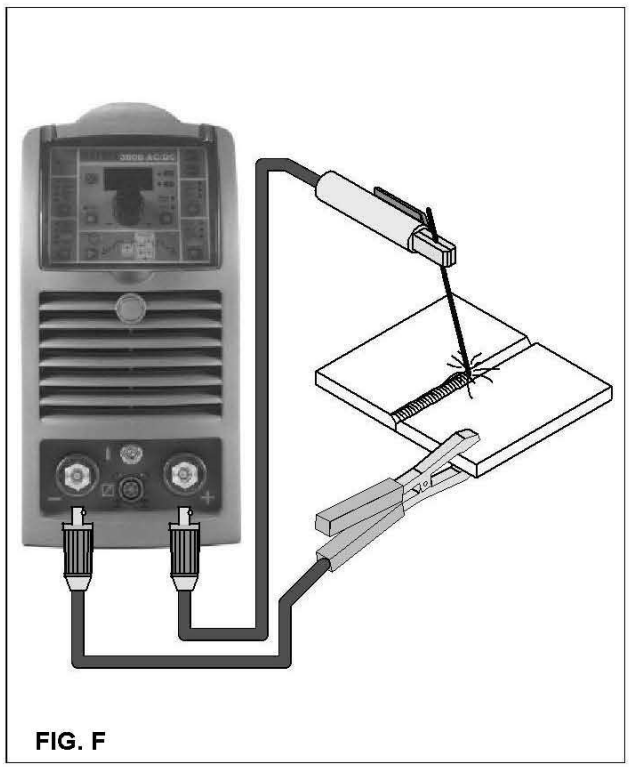

FIG. F

PART TO BE WELDED
The part to be welded must always be connected to ground in or-der to reduce electromagnetic emission. Much attention must be afforded so that the ground connection of the part to be welded does not increase the risk of accident to the user or the risk of dam-age to other electric equipment. When it is necessary to connect the part to be welded to ground, you should make a direct con-nection between the part and the ground shaft. In those countries in which such a connection is not allowed, connect the part to be welded to ground using suitable capacitors, in compliance with the national regulations.

WELDING PARAMETERS
Table 3 shows the currents to use with the respective electrodes for TIG welding. This input is not absolute but is for your guidance only; read the electrode manufacturers' instructions for a specific choice. The diameter of the electrode to use is directly proportion-al to the current being used for welding.

Table 3

Ø ELECTRODE (mm)	CURRENT (A)
1,2	10 ÷ 80
1,6	70 ÷ 150
2,4	140 ÷ 250
3,2	225 ÷ 400
4,0	300 ÷ 500

Electrode welding (MMA)

The welding electrode is used to weld most metals (various types steel, etc.),for which rutilic and basic electrodes are used.

- Connecting the welding cables (Fig. F):
  Disconnect the machine from the mains power supply and con-nect the welding cables to the output terminals (Positive and Negative) of the welding machine, attaching them to the clamp and ground with the polarity specified for the type of electrode being used (Fig.F). Always follow the electrode manufactur-er's instructions. The welding cables must be as short as pos-sible, they must be near to one another, positioned at or near floor level. Do not touch the electrode clamp and the ground clamp simultaneously.
- Switch the welding machine on by moving the power supply switch to **I** (Pos. 6, Fig. A).
- Make the adjustments and select the parameters on the con-trol panel (for further information see the MTA control panel manual).
- Carry out welding by moving the torch to the workpiece. Strike the arc (press the electrode quickly against the metal and then lift it) to melt the electrode, the coating of which forms a protec-tive residue. Then continue welding by moving the electrode from left to right, inclining it by about 60° compared with the metal in relation to the direction of welding.

PART TO BE WELDED
The part to be welded must always be connected to ground in or-der to reduce electromagnetic emission. Much attention must be afforded so that the ground connection of the part to be welded does not increase the risk of accident to the user or the risk of dam-age to other electric equipment. When it is necessary to connect the part to be welded to ground, you should make a direct con-nection between the part and the ground shaft. In those countries in which such a connection is not allowed, connect the part to be welded to ground using suitable capacitors, in compliance with the national regulations.

WELDING PARAMETERS
Table 4 shows some general indications for the choice of elec-trode, based on the thickness of the parts to be welded. The val-ues of current to use are shown in table 5 with the respective electrodes for the welding of common steels and low-grade al-loys. These data have no absolute value and are indicative data only. For a precise choice follow the instructions provided by the electrode manufacturer.

Table 4

WELDING THICKNESS (mm)	Ø ELECTRODE (mm)
1,5 ÷ 3	2
3 ÷ 5	2,5
5 ÷ 12	3,2
≥ 12	4

Table 5

Ø ELECTRODE (mm)	CURRENT (A)
1,6	30 ÷ 60
2	40 ÷ 75
2,5	60 ÷ 110
3,2	95 ÷ 140
4	140 ÷ 190
5	190 ÷ 240

The current to be used depends on the welding positions and the type of joint, and it increases according to the thickness and di-mensions of the part.
The current intensity to be used for the different types of welding, within the field of regulation shown in table 5 is:

- High for plane, frontal plane and vertical upwards welding.
- Medium for overhead welding.
- Low for vertical downwards welding and for joining small pre-heated pieces.

A fairly approximate indication of the average current to use in the welding of electrodes for ordinary steel is given by the follow-ing formula:

$$I = 50 \times (Øe - 1)$$

Where:
I = intensity of the welding
current Øe = electrode diameter
Example:
For electrode diameter 4 mm

$$I = 50 \times (4 - 1) = 50 \times 3 = 150A$$

Maintenance

ATTENTION: *Before carrying out any inspection of the inside of the generator, disconnect the system from the supply.*

SPARE PARTS
Original spare parts have been specially designed for our equip-ment. The use of non-original spare parts may cause variations in performance or reduce the foreseen level of safety. We decline all responsibility for the use of non-original spare parts.

GENERATOR
As these systems are completely static, proceed as follow:

- Periodic removal of accumulated dirt and dust from the inside of the generator, using compressed air. Do not aim the air jet directly onto the electrical components, in order to avoid dam-aging them.
- Make periodical inspections in order to individuate worn cables or loose connections that are the cause of overheating.

Optional

The remote controls can be only used in the 2-STROKE and 4-STROKE welding modes.

MANUAL REMOTE CONTROL

WARNING: *When using the machine for TIG welding it is OBLIGATORY to use the kit for simultaneously use –*

Weld current can be measured at a distance by connecting up this control. The display will show the previous maximum weld current value set on the welder. The remote control will adjust welding current from the minimum to this value (for further information see the MTA control panel manual). Just turn the adjustment knob on the welder to change the maximum output value.

FOOT SWITCH

The foot switch replaces the torch button and the welding current setting knob. The display will show the previous maximum weld current value set on the welder. The pedal will adjust the welding current from the minimum to this value (for further information see the MTA control panel manual). Just turn the adjustment knob on the welder to change the maximum output value.

NOTE:

- To use the pedal control correctly, set the "welding mode" to *2-STROKE and then the welding parameters SLOPE UP time to 0 sec., SLOPE DOWN time to 0 sec.*
- *When using the machine for TIG welding the operator can use the torch button to start the weld and the pedal to regulate the welding current remotely..*

AIR AND/OR WATER-COOLED TORCH UP/ DOWN

The up/down torch replaces the current setting knob on the front of the welder. Press right (+) and left (-) button to adjust the ac-tive parameter. With this kind of torch, it is also possible to scroll the saved programmes by pressing the two (+) and (-) buttons.

Turn the knob to scroll the programmes until an empty and unused programme is found.

NOTE: *Programme sequences can be created by placing an emp-ty programme between saved ones.*

NOTE: *The value shown on the display during welding represents the effective current output with all types of control.*

The digital control unit of the generator is fitted with a control rec-ognition device which allows it to identify which device is connect-ed and take action accordingly. To allow the command recognition device to work correctly, connect (with the machine switched off) the required accessory to the relative connector and then switch on the welding machine with the on/off switch.

NOTE: ***It is not possible to memorize or open programmes when the remote controls are connected (except for the torch with UP/DOWN commands).***

If a remote control is connected (followed by self-acknowledgement procedure) the machine will automatically return to the manual-welding phase if it has been pre-set for automatic welding.

The pointing out of any difficulties and their elimination

The supply line is attributed with the cause of the most common difficulties. In the case of breakdown, proceed as follows:

- Check the value of the supply voltage
- Check that the power cable is perfectly connected to the plug and the supply switch
- Check that the power fuses are not burned out or loose
- Check whether the following are defective:
  The switch that supplies the machine.
  The plug socket in the wall.
  The generator switch.

NOTE: *Given the required technical skills necessary for the repair of the generator, in case of breakdown we advise you to contact skilled personnel or our technical service department.*

Digital interface PCB replacement

- Unscrew the 4 screws fastening the front rack panel.
- Remove the adjustment knob.
- Extract wiring connectors from digital interface PCB.
- Unscrew small supporting columns.
- Remove digital interface PCB by lifting it out of its supports.
- Proceed vice versa to assemble new digital interface PCB.

Meaning of graphic symbols on machine

0 I	Power supply switch
S	System for use in environments with increased risk of electroshock
CE	Product suitable for free circulation in the European Community
	Danger! High voltage
	Grounding
+	Positive pole snap-in connector
−	Negative pole snap-in connector
	Connector for the remote control
	Warning!
	Fast coupling TIG torch gas tube
	Before using the equipment you should carefully read the instructions included in this manual
	MMA welding
	TIG welding
	Special disposal

Adjustment of electronic circuit board

PT1 Adjustment of the maximum current
PT2 Adjustment of the minimum current

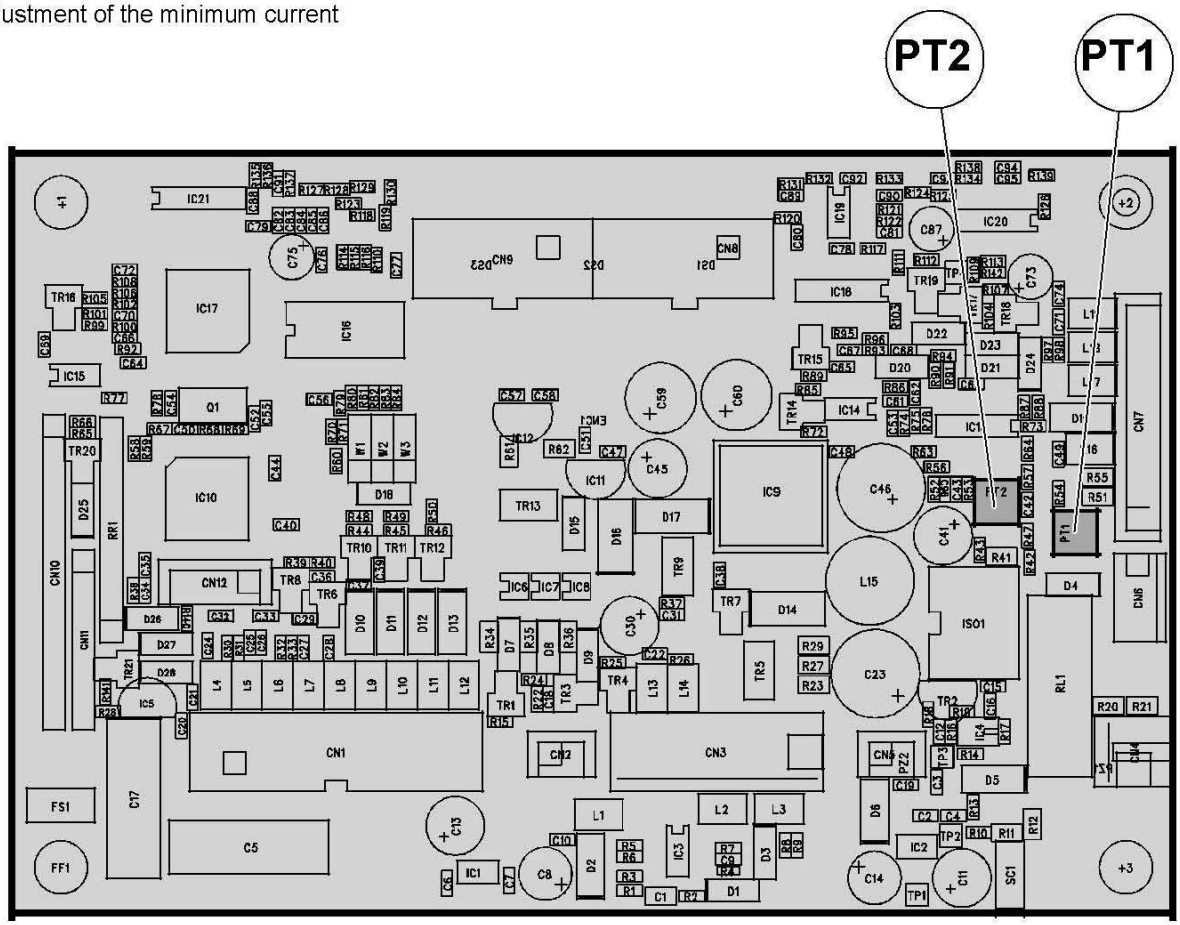

Wiring diagram (PoWer TIG 3000 AC/DC Pulse)

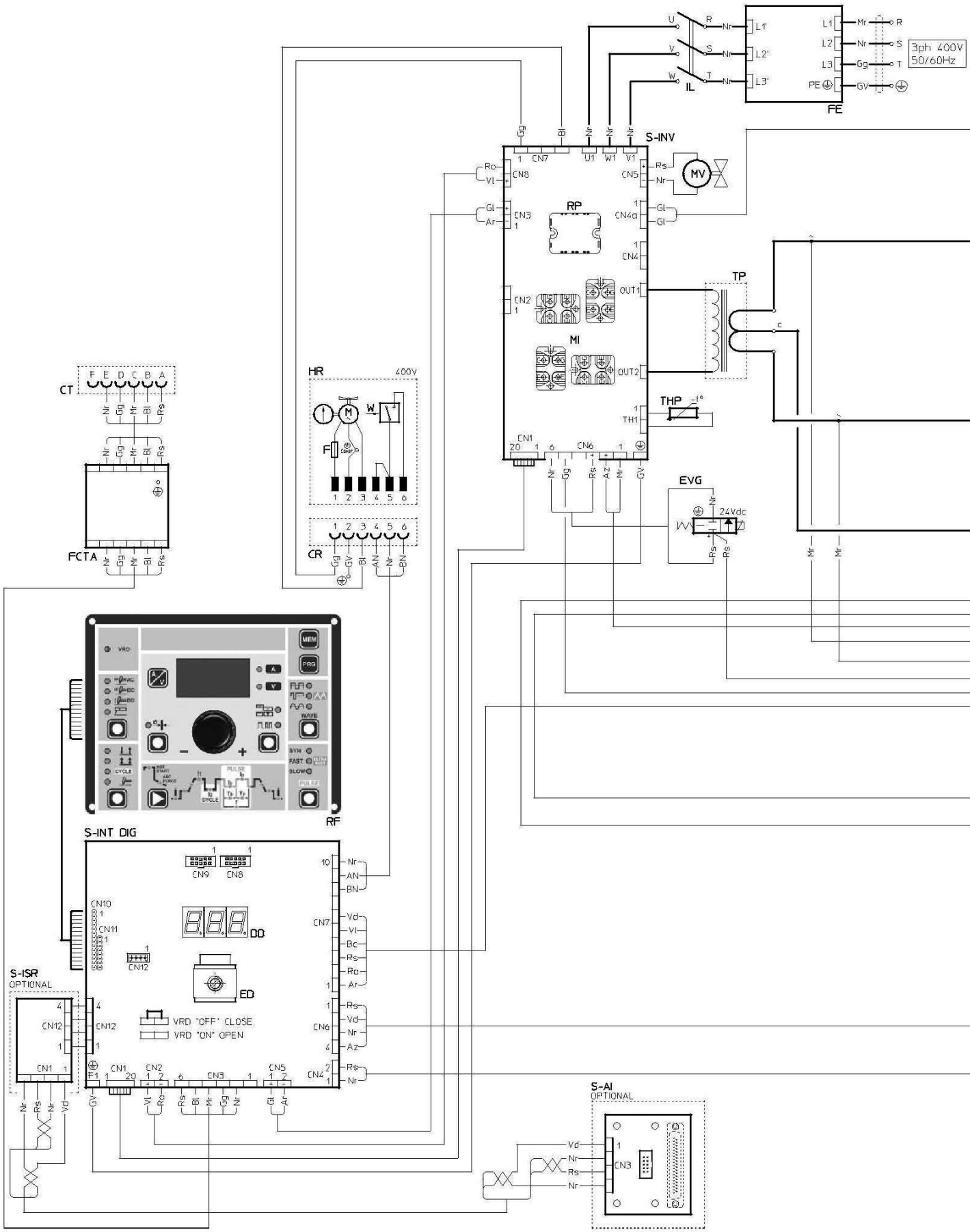

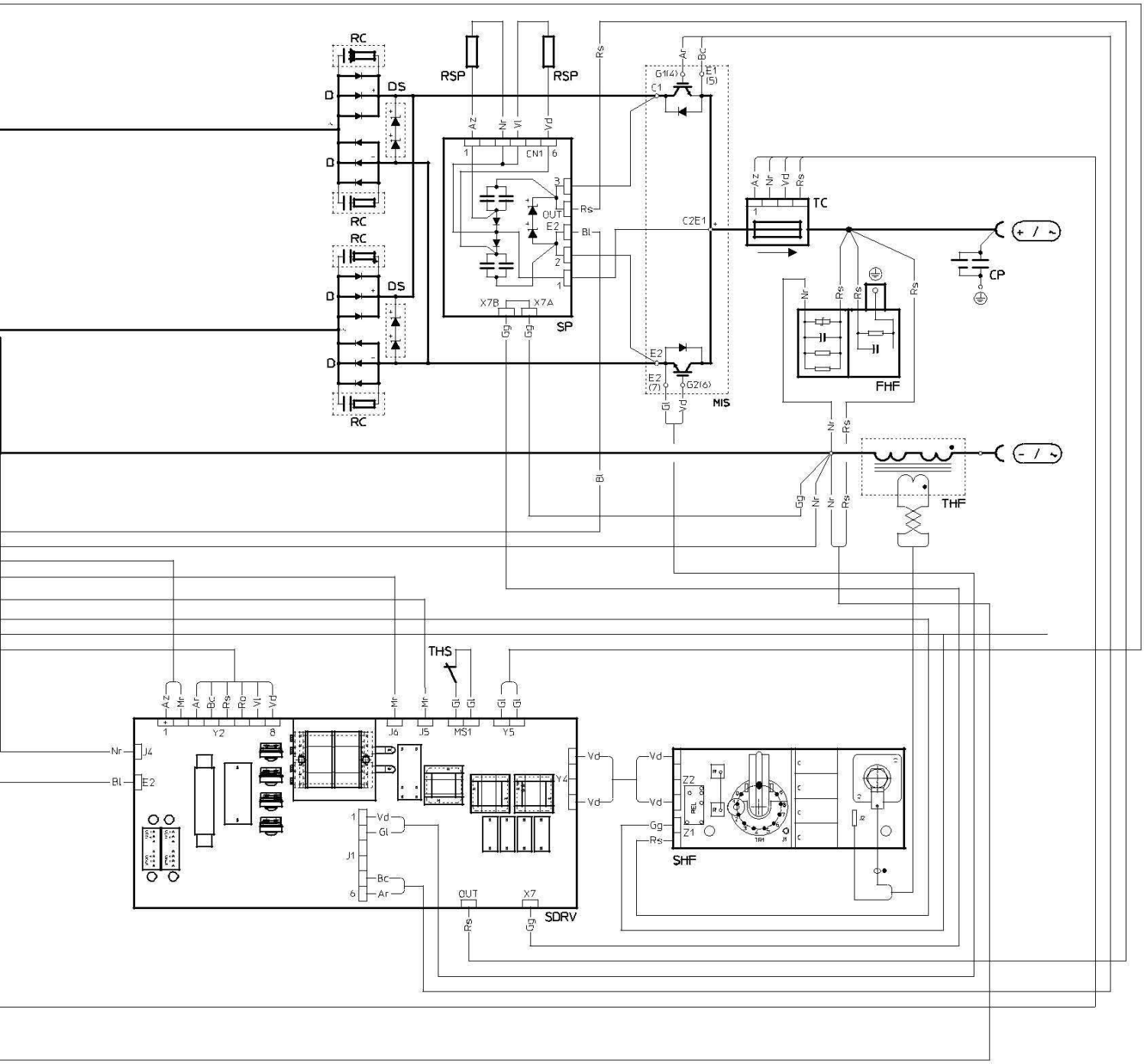
RC
DS
RSP
RSP
SP
MIS
TC
CP
FHF
THF
THS
SDRV
SHF
OUT
X7B
X7A
X7
CN1
C2E1
G1(4)
E1 (5)
E2 (7)
G2(6)
Y2
J6
J5
MS1
Y5
Y4
J4
J1
Z2
Z1
Az
Nr
Vl
Vd
Rs
Bl
Gg
Gl
Ar
Bc
Ro

2101WB09

•1 C	•2 CA	•3 CP	•4 CR	•5 CT	•6 D	•7 DB	•8 DD	•9 DS	•10 ED
•11 EVG	•12 F	•13 FCTA	•14 FE	•15 FHF	•16 HR	•17 IL	•18 L	•19 L1-2	•20 M
•21 MI	•22 MI2	•23 MIS	•24 MV	•25 RC	•26 RF	•27 RP	•28 RSP	•29 S-AI	•30 S-INT DIG
•31 S-INV	•32 S-ISR	•33 SD	•34 SDRV	•35 SF	•36 SHF	•37 SI	•38 SP	•39 TC	•40 TF
•41 TH	•42 THF	•43 THP	•44 THS	•45 TP	•46 W				

Key to the electrical diagram

•1 Capacitor **•2** Power supply connector 230V 50/60Hz **•3** EMC capacitors **•4** Power supply connector for the cooling system **•5** TIG torch connec-tor **•6** Secondary diode **•7** "Dual Boost Chopper" IGBT **•8** Digital display **•9** Secondary diode discharger **•10** Encoder **•11** Gas solenoid valve **•12** Fuse **•13** Torch filter complete with connector **•14** EMC filter **•15** HF filter **•16** Water cooling system **•17** Power supply switch **•18** Inductor **•19** PFC inductances **•20** Electric pump **•21** Primary IGBT circuit **•22** "Full Bridge" IGBT **•23** Secondary IGBT circuit **•24** Fan motor **•25** Secondary R-C diode **•26** Membrane keyboard **•27** Primary rectifier **•28** Secondary IGBT protection board resistance **•29** Interface for automation (optional extra) **•30** Digital interface PCB **•31** Inverter PCB **•32** Automation interface isolation board (optional extra) **•33** Secondary circuit diodes PCB **•34** Secondary circuit PCB **•35** EMC filter PCB **•36** High frequency (HF) PCB **•37** Secondary cir-cuit IGBT board **•38** Secondary IGBT protection board **•39** Current trans-ducer **•40** Toroidal ferrite **•41** Secondary circuit diode thermostat **•42** HF transformer **•43** Primary circuit thermistor **•44** Secondary circuit thermo-stat **•45** Transformer **•46** Pressure switch

Colour key

AN Orange-Black
Ar Orange
Az Sky blue
Bc White
Bl Blue
BN White-Black
Gg Grey
Gl Yellow
GV Yellow-Green
Mr Brown
Nr Black
Ro Pink
Rs Red
Vd Green
Vl Violet

PoWer TIG Series

GeKaMac®

Gedik Welding Ankara Caddesi
No : 306 Şeyhli 34906 Pendik, İstanbul / Turkey
P +90 216 378 50 00 F +90 216 378 20 44
gedik@gedik.com.tr